www.TheDrawerDepot.com

6552 SERIES SINK FRONT (TIP-OUT) TRAY HINGES

Rev-A-Shelf's patented hinges supply full accessibility to stored items with a smooth, quiet and reliable pull-out and tip open function. The Self-Holdin® hinge is available in two different sizes with a unique self-closing spring to keep false fronts securely closed. The Euro hinge is deigned for long sink front false panels and features an adjustable opening of 45 to 90 degrees.

6552-94-0220-4 (Patented)

6552-95-0220-4 (Patented)

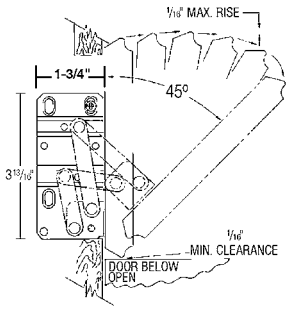

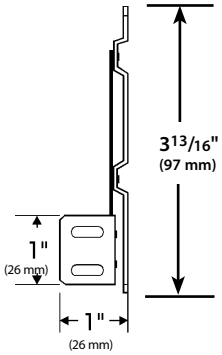

PRODUCT #'s	DESCRIPTION	PRODUCT DIMENSIONS	FINISH	SET PER CARTON	WEIGHT PER CARTON	SUGGESTED LIST PRICE
Tip-Out (Self-Holdin®) Hinges						**Bulk Pack**
6552-94-0220-4	Hinges For Tip-Out Trays (under 16")	1" (26 mm)W x 1¾" (45 mm)D x 3 13/16" (97 mm)H	Metal	40 pr.	10.5 lbs.	$6.10 pr.
6552-95-0220-4	Hinges For Tip-Out Trays (16" and longer)	1" (26 mm)W x 1¾" (45 mm)D x 3 13/16" (97 mm)H	Metal	40 pr.	10.5 lbs.	$6.10 pr.

NOTE:
The hinge profile shows the function of our Self-Holdin® Brand Hinges. Less than 2 mm of clearance is needed for the counter top and no clearance is needed below the false front.

ETH SERIES SINK FRONT (TIP-OUT) TRAY HINGES

The Euro hinge is deigned for long sink front false panels and features an adjustable opening of 45 to 90 degrees.

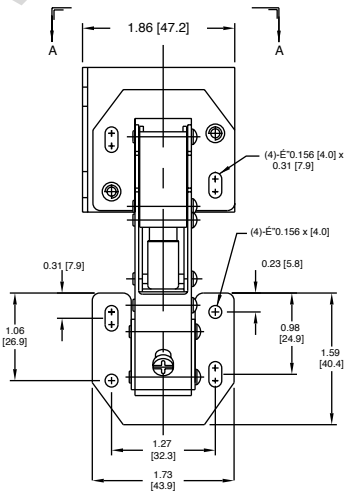

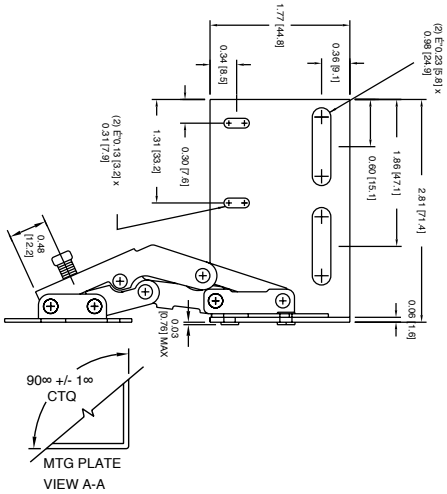

PRODUCT #'s	DESCRIPTION	PRODUCT DIMENSIONS	FINISH	SET PER CARTON	WEIGHT PER CARTON	SUGGESTED LIST PRICE
Euro Hinges						**Bulk Pack**
6552-ETH-10	Euro Hinges	See Illustration Above	Chrome	10 pr.	3.9 lbs.	$9.30 pr.

NOTE:
The ETH Hinge also can be used on cook top false fronts or in the bathroom on a vanity cabinet with a false front. Chrome plating allows for installation in any application.

DRAWERDEPOT.COM